Differential Assembly
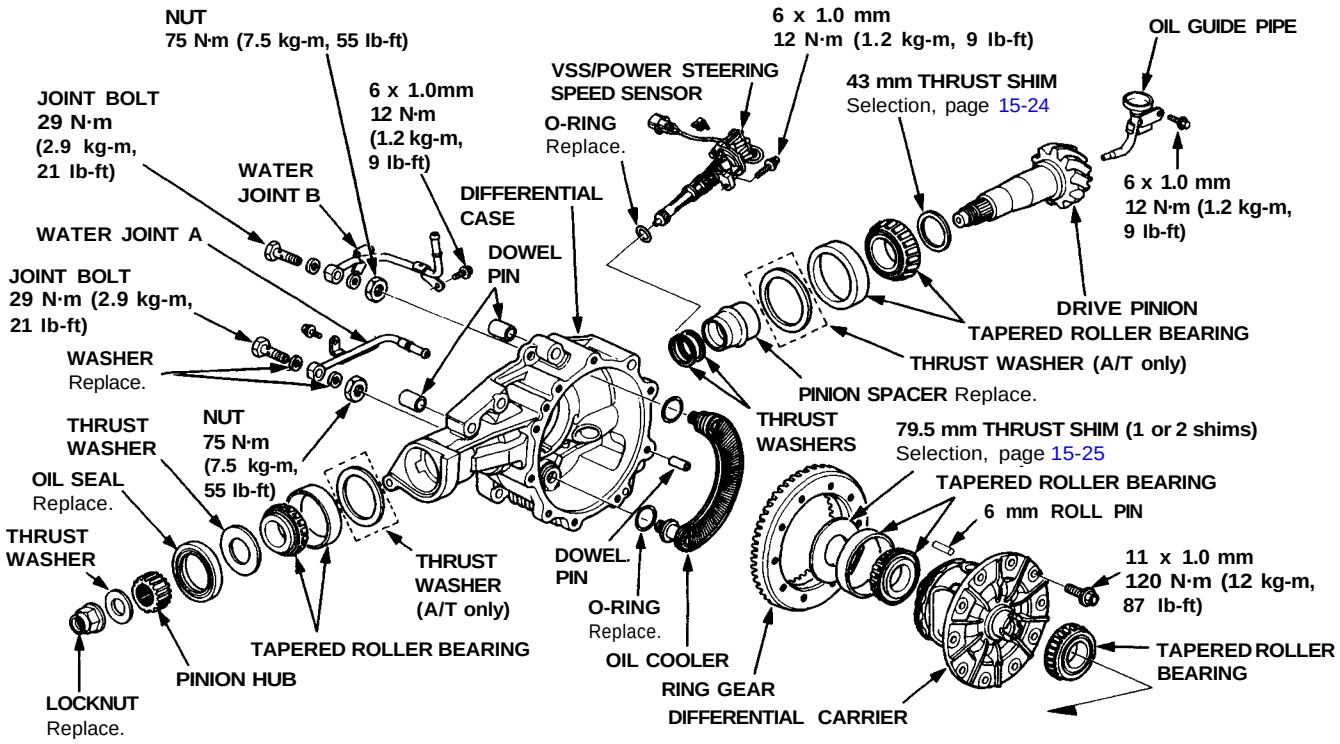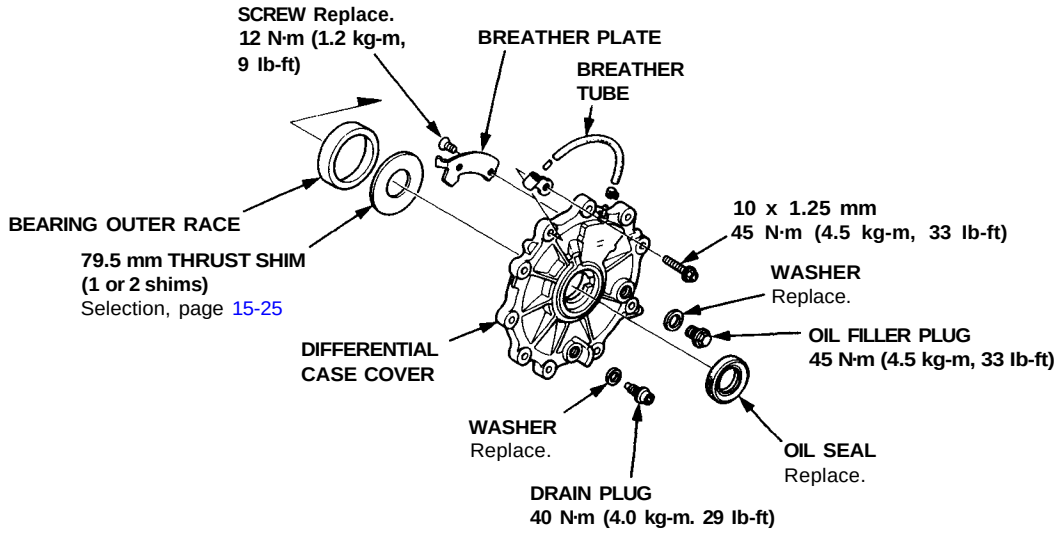
Illustrated Index